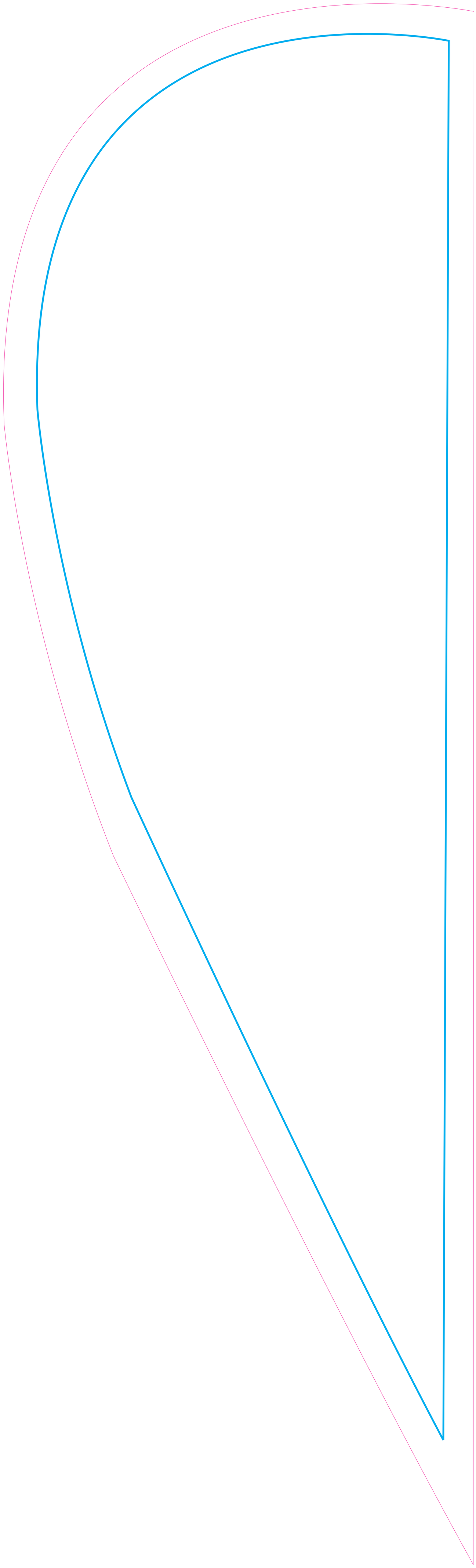

TEAR DROP SMALL ONE SIDED

Safe Area

All text and logos need to be inside the safe area.

Finished Size

This line indicates the final finished size. Use this line to create a clipping path of your final artwork.

DYE SUBLIMATION PRINTING

We use state-of-the-art full color dye sublimation printers that direct print ink onto the fabric and then infuses with the fabric through a heating procedure. No transfer paper is used which allows us to print faster and with stunning rich results.

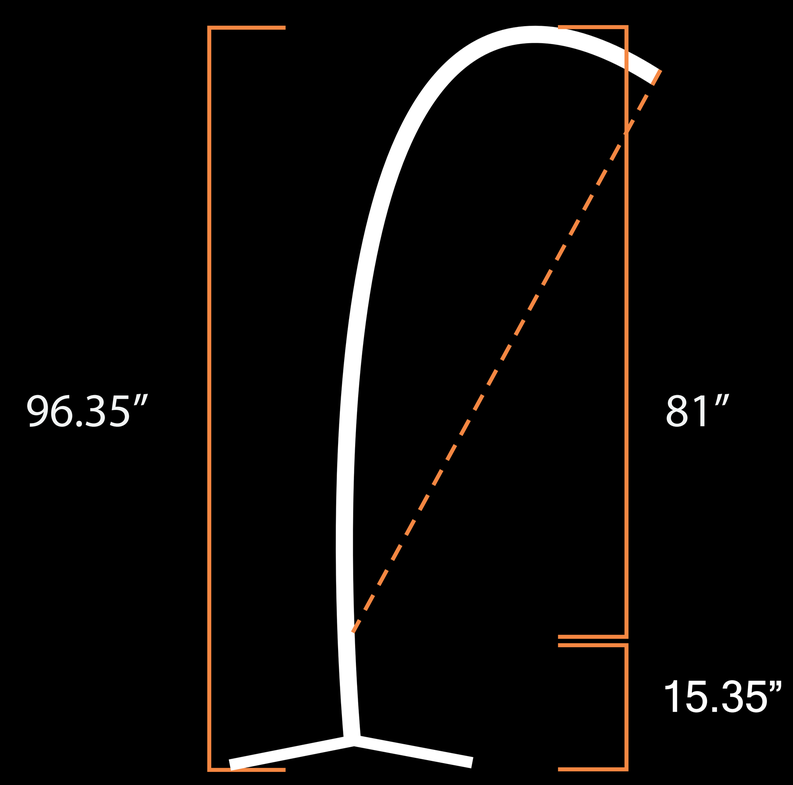

Tear Drop Banner Small - 1 Sided

- **ALL IMAGES MUST BE EMBEDDED**
- **ALL FONTS MUST BE CONVERTED TO OUTLINES**
- **ARTWORK NEEDS TO BE IN CMYK MODE**

Please note that PMS colors will be converted to CMYK which can cause colors to shift.
If you require color matching, please ask for details on our color matching service.

VECTOR	IMAGE
B B	B
LINES IMAGE	RASTER
• Adobe IIllustrator : (.ai - .pdf - .eps)	• Adobe Photoshop : (.psd - .tiff - .jpg)
• All fonts Outlined	• 200 DPI at 100% Scale
• Images Embeded	